radwag.com

# H315.4N.600.H2.LD Stainless Steel Ramp Scale

More information on the website
radwag.com/en/info,w1,ZW4

The drawings, photos and graphics used are for illustrative purposes only.

## Functions

- Plus/Minus Control
- Percent Weighing
- Totalizing
- Parts counting
- Internal battery
- Peak hold
- Newton unit measurement
- Animal weighing

## Datasheet

| Metrological parameters | |
|---|---|
| Maximum capacity [Max] | 600 kg |
| Minimum load | 4 kg |
| Readability [d] | 200 g |
| Tare range | -600 kg |
| Max readability for non-verified scale | 50 g |
| OIML Class | III |

| Physical parameters | |
|---|---|
| Display | LCD (backlit) |
| Weighing pan dimensions | 1100×1200 mm |

| | |
|---|---|
| **Physical parameters** | |
| Packaging dimensions | 1640×1590×580 mm |
| Net weight | 175 kg |
| Gross weight | 300 kg |
| Cable length | 3 m |
| **Construction** | |
| Protection class | IP 68 construction, IP 68 (1h max)/69 indicator |
| **Communication interface** | |
| Communication interface | RS232, USB |
| Optional interfaces | RS232 or RS485 or 4IN/4OUT or Ethernet or analog output 4-20 mA |
| **Electrical parameters** | |
| Power supply | 100 – 240 V AC 50/60 Hz |
| Optional power supply | internal rechargeable battery |
| Operation time on batteries | max 7h |
| **Environmental conditions** | |
| Operating temperature | -10 ÷ +40 °C |
| Relative humidity | 10% ÷ 85% RH no condensation |

Extra payment for verification

## Accessories

RS 232 cables (scale - printer)
Displays
RS 232 cables (scale - Ethernet)
RS 232, RS 485 cables
RS 232 – Ethernet Converter
USB adatper
Receipt Printer
USB cable (scale - printer)
Stands, wall mounting kits and mounting brackets
RS 232 – USB Converter
RS 232, RS 485 cables

## Software

• RAD Key [WX-010-0005]
• R-Lab [WX-010-0080]
• R-Panel [WX-010-0187]
• Scale Editor 2.1 [WX-010-0173]

## Device dimensions

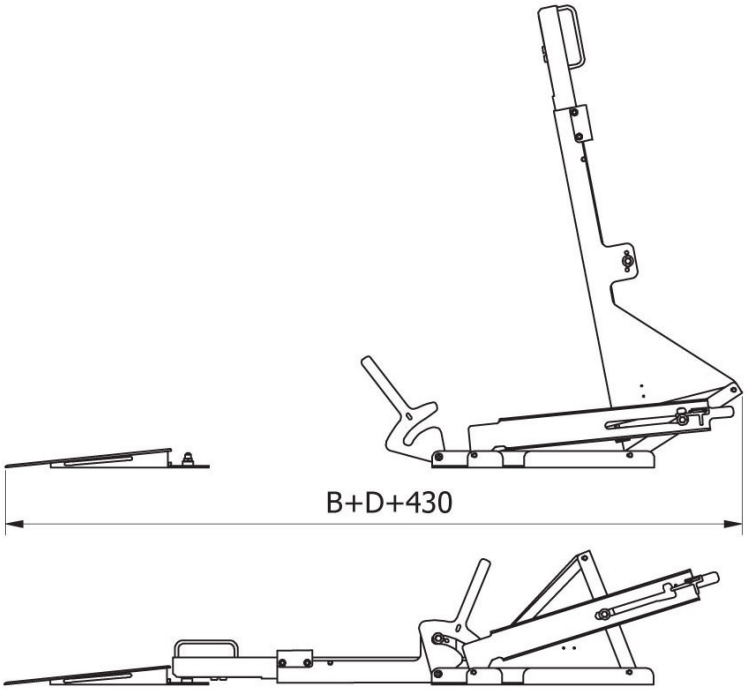


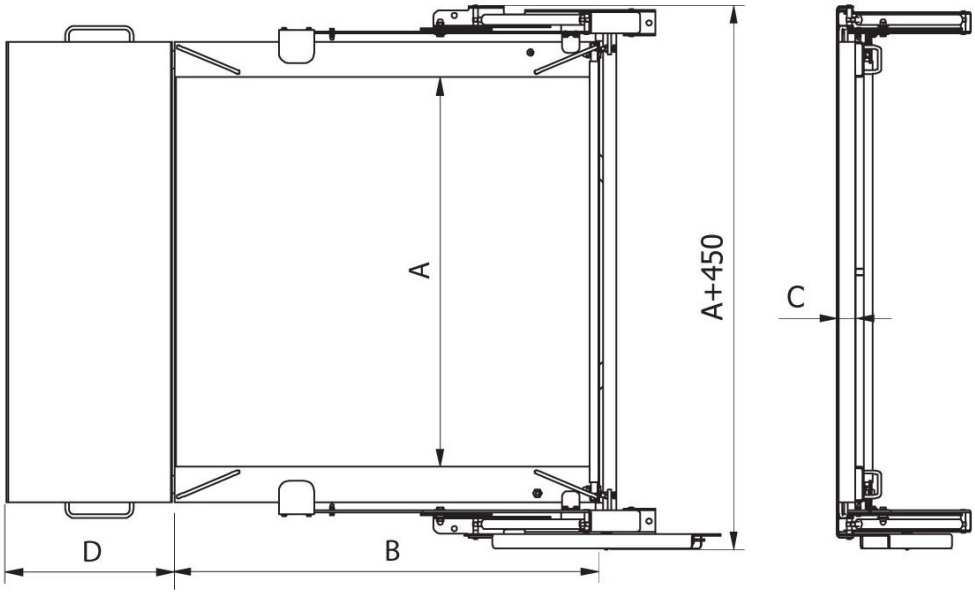


| | A [mm] | B [mm] | C [mm] | D [mm] |
|---|---|---|---|---|
| H315.4N.150.H1.LD | 840 | 860 | 45 | 426 |
| H315.4N.300.H1.LD | 840 | 860 | 45 | 426 |
| H315.4N.600.H1.LD | 840 | 860 | 45 | 426 |
| H315.4N.150.H2.LD | 1100 | 1200 | 45 | 426 |
| H315.4N.300.H2.LD | 1100 | 1200 | 45 | 426 |
| H315.4N.600.H2.LD | 1100 | 1200 | 45 | 426 |
| H315.4N.300.H3.LD | 1200 | 1500 | 45 | 426 |
| H315.4N.600.H3.LD | 1200 | 1500 | 45 | 426 |
| H315.4N.1500.H2.LD | 1100 | 1200 | 52 | 476 |
| H315.4N.1500.H3.LD | 1200 | 1500 | 52 | 476 |
| H315.4N.300.H4.LD | 1500 | 1500 | 52 | 476 |
| H315.4N.600.H4.LD | 1500 | 1500 | 52 | 476 |
| H315.4N.1500.H4.LD | 1500 | 1500 | 52 | 476 |