radwag.com

H315.15.HR4.K Waterproof Scale With Stainless Steel Load Cell

More information on the website
radwag.com/en/info,w1,YVP

The drawings, photos and graphics used are for illustrative purposes only.

Functions

- Plus/Minus Control
- Percent Weighing
- Totalizing
- Parts counting
- Internal battery
- Peak hold
- Newton unit measurement
- Animal weighing

Datasheet

Metrological parameters	
Maximum capacity [Max]	15 kg
Minimum load	100 g
Readability [d]	5 g
Verification unit [e]	5 g
Tare range	-15 kg
Max readability for non-verified scale	0.5 g
OIML Class	III
Physical parameters	
Display	LCD (backlit)

Physical parameters	
Weighing pan dimensions	500×500 mm
Packaging dimensions	610×610×330 mm
Net weight	23.5 kg
Gross weight	25.8 kg
Cable length	2.5 m
Construction	
Protection class	IP 68 construction, IP 68 cell, IP 68 (1h max)/69 indicator
Construction	Stainless steel AISI316
Communication interface	
Communication interface	RS232, USB
Optional interfaces	RS232 or RS485 or 4IN/4OUT or Ethernet or analog output 4-20 mA
Electrical parameters	
Power supply	100 – 240 V AC 50/60 Hz
Optional power supply	internal rechargeable battery
Operation time on batteries	max 7h
Environmental conditions	
Operating temperature	-10 ÷ +40 °C
Storage temperature	-25 - +70 °C
Relative humidity	10% ÷ 85% RH no condensation

Extra payment for verification

Accessories

RS 232 cables (scale - printer)
Antivibration Tables
Displays
RS 232 cables (scale - Ethernet)
RS 232, RS 485 cables
RS 232 – Ethernet Converter
USB adatper
Receipt Printer
Roller Table
USB cable (scale - printer)
Stands, wall mounting kits and mounting brackets
RS 232 – USB Converter
RS 232, RS 485 cables

Software

- RAD Key [WX-010-0005]
- R-Lab [WX-010-0080]
- R-Panel [WX-010-0187]
- Scale Editor 2.1 [WX-010-0173]

Device dimensions

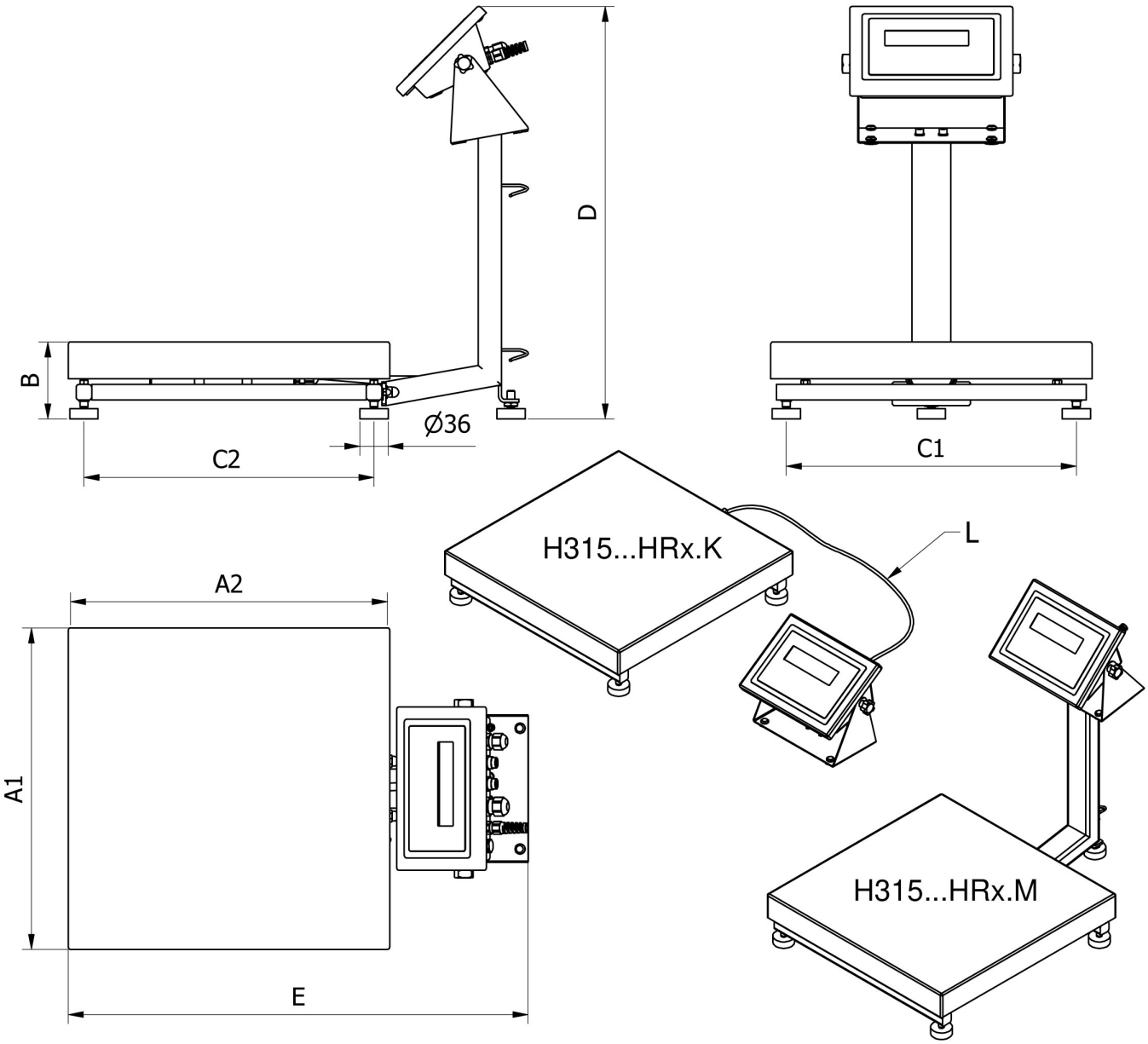

		A1	A2	B	C1	C2	D	E	L
H315...HR2.M	250 x 300	246	306	104 ± 3	208	268	~525	~483	
H315...HR2.K	250 x 300	246	306	104 ± 3	208	268	-	-	1,5m
H315...HR3.M	410 x 410	410	410	98 ± 2	370	370	~525	~587	
H315...HR3.K	410 x 410	410	410	98 ± 2	370	370	-	-	2,5m
H315...HR4.M	500 x 500	497	497	155 ± 5	400	400	~767	~650	
H315...HR4.K	500 x 500	497	497	155 ± 5	400	400	-	-	2,5m
H315...HR3/5.M	400 x 600	597	397	155 ± 5	500	300	~767	~550	
H315...HR3/5.K	400 x 600	597	397	155 ± 5	500	300	-	-	2,5m
H315...HR5.M	600 x 600	597	597	155 ± 5	500	500	~767	~750	
H315...HR5.K	600 x 600	597	597	155 ± 5	500	500	-	-	2,5m