radwag.com

HX7.4N.1500.H2 Multifunctional Stainless Steel Ramp Scale

More information on the website
radwag.com/en/info,w1,XNR

The drawings, photos and graphics used are for illustrative purposes only.

Functions

- Dosing
- Percent Weighing
- Parts counting
- Formulation
- Replaceable unit
- ALIBI Memory

Datasheet

Metrological parameters	
Maximum capacity [Max]	1500 kg
Minimum load	10 kg
Readability [d]	500 g
Verification unit [e]	500 g
Tare range	-1500 kg
Max readability for non-verified scale	100 g
OIML Class	III

Physical parameters	
Display	7” graphic colour

Physical parameters	
Weighing pan dimensions	1100×1200 mm
Packaging dimensions	1500×1300×600 mm
Net weight	189.7 kg
Gross weight	226.3 kg
Cable length	3 m
Indicator	PUE HX7
Number of buttons	22
Construction	
Protection class	IP 68 construction, IP 66/68 indicator
Keypad	membrane
Construction	Stainless steel AISI304
Communication interface	
Communication interface	RS232, USB-A, 4IN, 4OUT, Ethernet, Modbus RTU
Optional interfaces	USB (M12 4P), Ethernet, module RS485, module RS232, module Profibus (Dp SLAVE), PROFINET (RRJ45), EtherNet/IP (RRJ45), 12 IN, 12 OUT, 4-20mA, 0-10V
Electrical parameters	
Power supply	100 – 240 V AC 50/60 Hz
Power consumption max.	25 W
Optional power supply	12-24V DC
Environmental conditions	
Operating temperature	-10 ÷ +40 °C
Storage temperature	-10 ÷ +50 °C
Relative humidity	10% ÷ 80% RH no condensation
Features of use	
Max number of platforms	2

Extra payment for verification

Accessories

RS 232 cables (scale - printer)
RS 232 cables (scale - ZEBRA printer)
Displays
Power Adapters
USB cable (scale - printer)
IN/OUT Cables
Barcode scanners
RS 232, RS 485 cables
Label Printers
Stands, wall mounting kits and mounting brackets
Keypad, external switches
USB adatper
Receipt Printer
Additional Weighing platforms Module
RS 232 – USB Converter
Additional modules

Software

- E2R Weighing [WX-010-0099]
- RAD Key [WX-010-0005]
- Alibi Reader [WX-010-0114]
- Scale Editor 2.1 [WX-010-0173]
- E2R Weighing Records [WX-010-0038]
- Label Editor R02 [WX-010-0094]
- R-Lab [WX-010-0080]
- RADWAG Development Studio [WX-010-0104]

Device dimensions

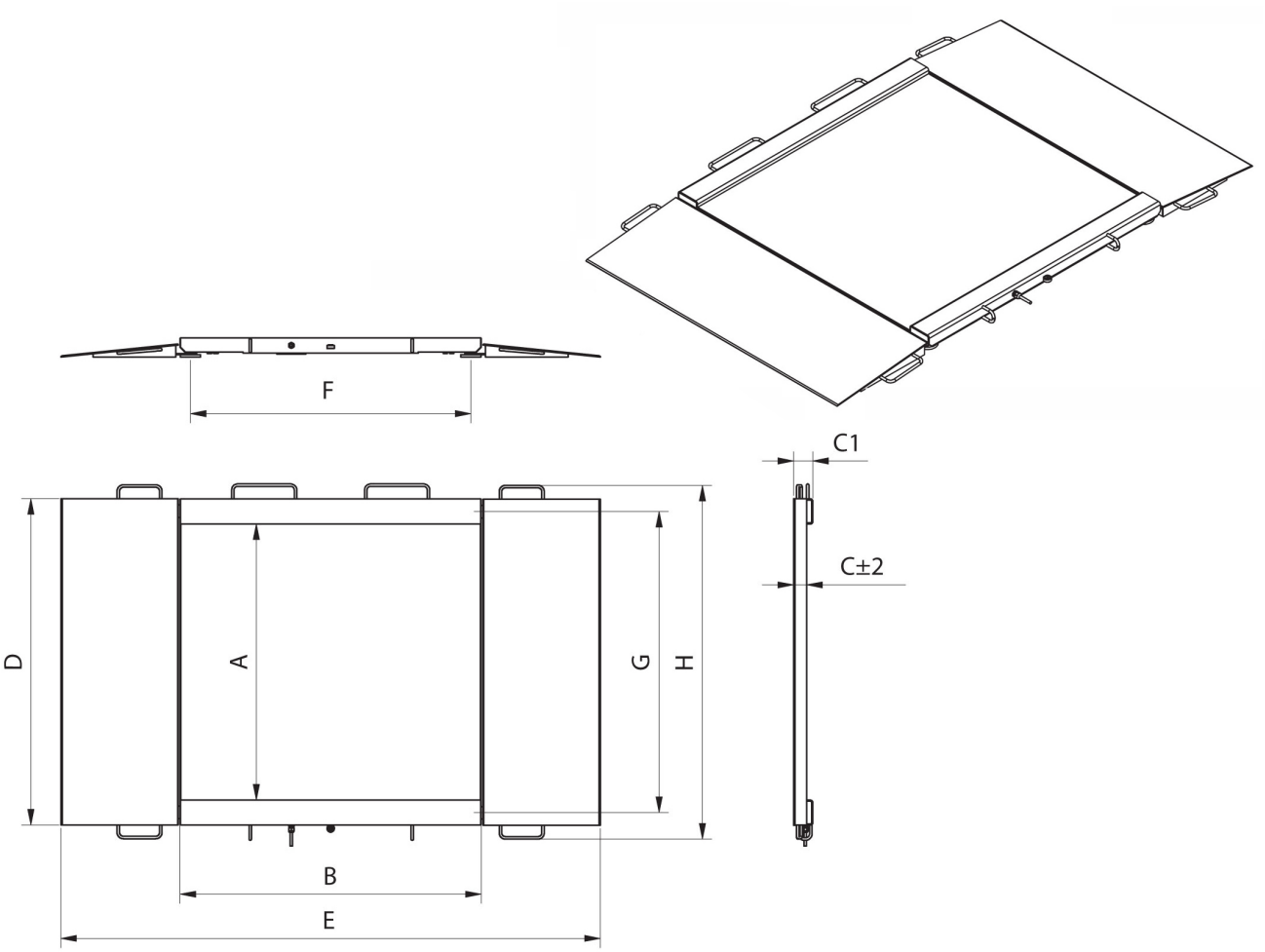

Model	Max	A	B	C	C1	D	E	F	G	H
HX7.4N.150.H1	150 kg	840	860	45,5	76	1040	1710	778	940	1170
HX7.4N.300.H1	300 kg	840	860	45,5	76	1040	1710	778	940	1170
HX7.4N.600.H1	600 kg	840	860	45,5	76	1040	1710	778	940	1170
HX7.4N.150.H2	1500 kg	1100	1200	45,5	76	1300	2050	1118	1200	1430
HX7.4N.300.H2	300 kg	1100	1200	45,5	76	1300	2050	1118	1200	1430
HX7.4N.600.H2	600 kg	1100	1200	45,5	76	1300	2050	1118	1200	1430
HX7.4N.1500.H2	1500 kg	1100	1200	52,5	76	1300	2150	1118	1200	1430
HX7.4N.300.H3	300 kg	1200	1500	45,5	76	1400	2350	1418	1300	1530
HX7.4N.600.H3	600 kg	1200	1500	45,5	76	1400	2350	1418	1300	1530
HX7.4N.1500.H3	1500 kg	1200	1500	52,5	76	1400	2450	1418	1300	1530
HX7.4N.300.H4	300 kg	1500	1500	52,5	76	1700	2450	1418	1600	1830
HX7.4N.600.H4	600 kg	1500	1500	52,5	76	1700	2450	1418	1600	1830
HX7.4N.1500.H4	1500 kg	1500	1500	52,5	76	1700	2450	1418	1600	1830

* dimensions in mm