radwag.com

WWG-2/2 Large-Size Display

More information on the website
radwag.com/en/info,w1,XFI

The drawings, photos and graphics used are for illustrative purposes only.

Datasheet

Cable length	3 (max 10) m
Character size	112 mm
Construction	
Protection class	IP 66 / IP 67
Physical parameters	
Packaging dimensions	750×280×120 mm
Net weight	5.5 kg
Gross weight	7 kg

Device dimensions

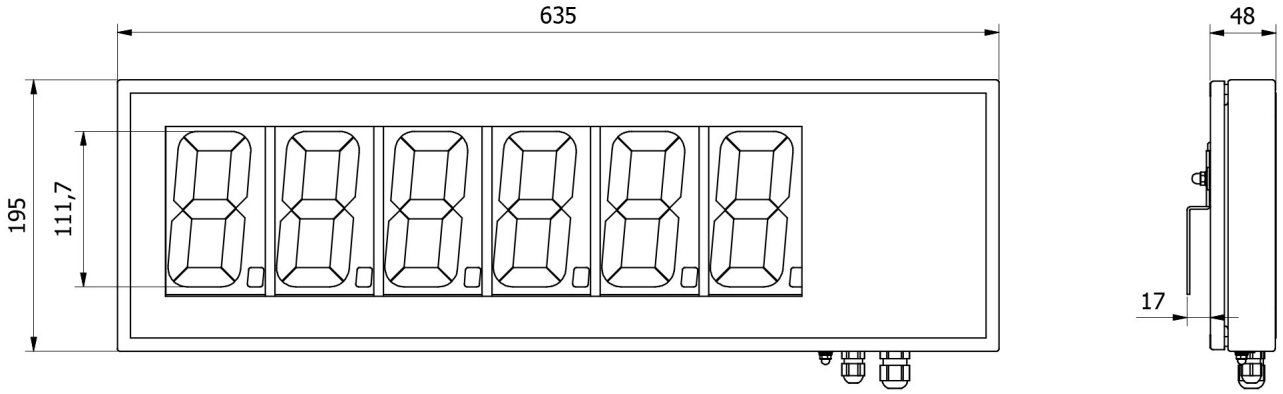
635
48
195
111,7
17