radwag.com

PL/4N/1500/H4.LD Platform

WX-009-0250

More information on the website
radwag.com/en/info,w1,l5H



The drawings, photos and graphics used are for illustrative purposes only.

Datasheet

Metrological parameters	
Maximum capacity [Max]	1500 kg
Readability [d]	500 g
Construction	
Protection class	IP 66 / 69
Construction	Stainless steel AISI304
Weighing pan material	Stainless steel AISI304
Physical parameters	
Weighing pan dimensions	1500×1500 mm
Weighing platform height	77 mm

Readability accuracy – expected value, dependent on the parameters of the measuring transmitter used.

Accessories (Additional Fee)

PUE 5 Weighing Terminal
PUE HX7 Weighing Terminal
PUE 7.1 Weighing Terminal
PUE HY10 Weighing Terminal

Device dimensions W x D x H

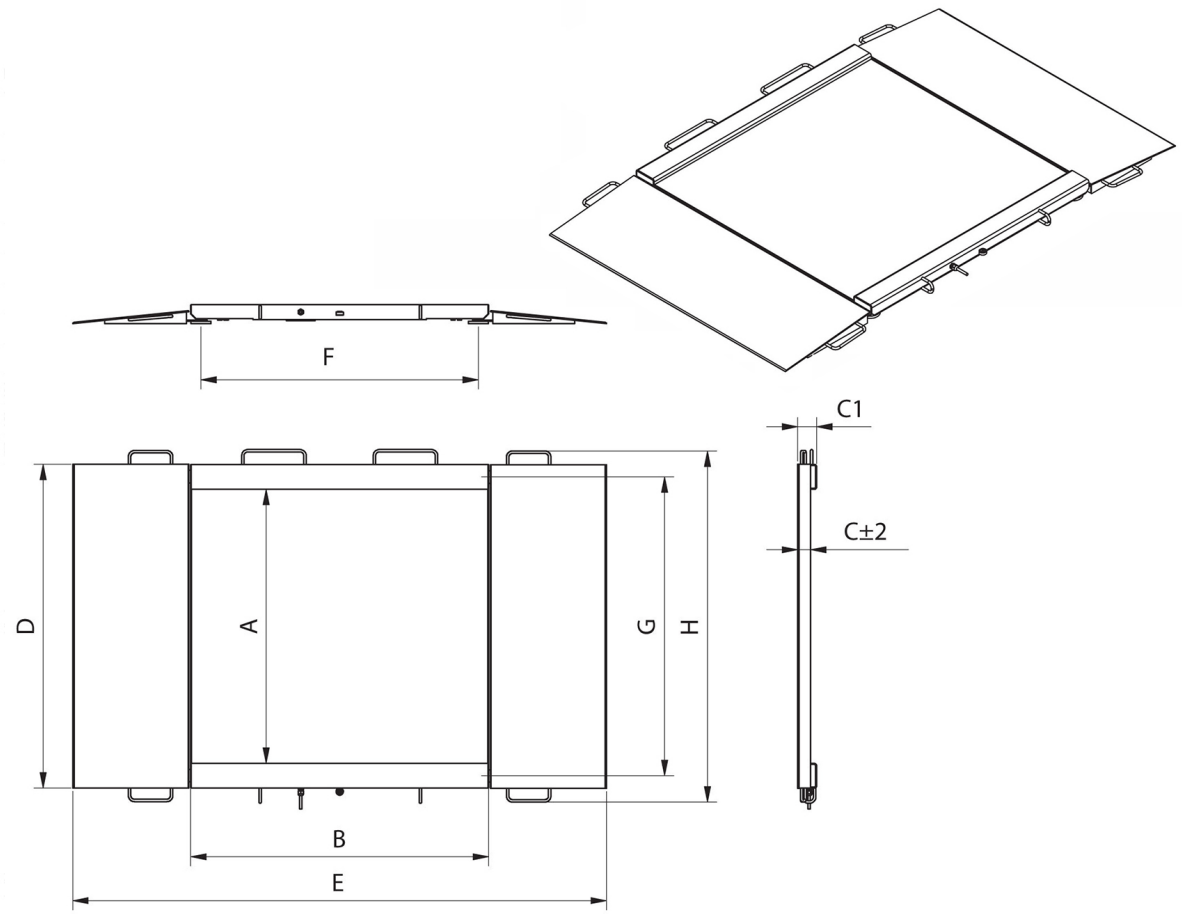

Model	Max	A	B	C	C1	D	E	F	G	H
PL/4N/150/H1	150 kg	840	860	45,5	76	1040	1710	778	940	1170
PL/4N/300/H1	300 kg	840	860	45,5	76	1040	1710	778	940	1170
PL/4N/600H1	600 kg	840	860	45,5	76	1040	1710	778	940	1170
PL/4N/150H2	1500 kg	1100	1200	45,5	76	1300	2050	1118	1200	1430
PL/4N/300/H2	300 kg	1100	1200	45,5	76	1300	2050	1118	1200	1430
PL/4N/600/H2	600 kg	1100	1200	45,5	76	1300	2050	1118	1200	1430
PL/4N/1500/H2	1500 kg	1100	1200	52,5	76	1300	2150	1118	1200	1430
PL/4N/300/H3	300 kg	1200	1500	45,5	76	1400	2350	1418	1300	1530
PL/4N/600/H3	600 kg	1200	1500	45,5	76	1400	2350	1418	1300	1530
PL/4N/1500/H3	1500 kg	1200	1500	52,5	76	1400	2450	1418	1300	1530
PL/4N/300/H4	300 kg	1500	1500	52,5	76	1700	2450	1418	1600	1830
PL/4N/600/H4	600 kg	1500	1500	52,5	76	1700	2450	1418	1600	1830
PL/4N/1500/H4	1500 kg	1500	1500	52,5	76	1700	2450	1418	1600	1830