radwag.com

H315.4.600/1500.H9/Z Stainless Steel Platform Scale, Pit Version

More information on the website
radwag.com/en/info,w1,GU4

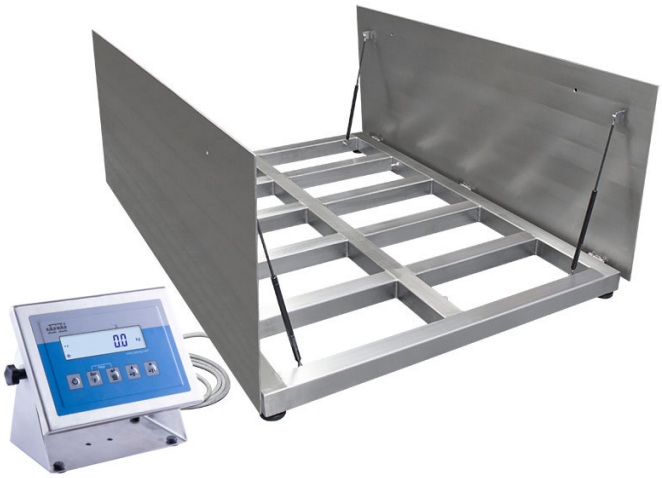

The drawings, photos and graphics used are for illustrative purposes only.

Functions

- Plus/Minus Control
- Percent Weighing
- Totalizing
- Parts counting
- Internal battery
- Peak hold
- Newton unit measurement
- Animal weighing

Datasheet

Metrological parameters	
Maximum capacity [Max]	600/1500 kg
Minimum load	4 kg
Readability [d]	200/500 g
Tare range	-1500 kg
OIML Class	III
Physical parameters	
Display	LCD (backlit)
Weighing pan dimensions	1500×1500 mm
Weighing platform height	88 mm

Physical parameters	
Scale mass with indicator and frame	210 kg
Cable length	3 m
Construction	
Protection class	IP 68 construction, IP 68 (1h max)/69 indicator
Communication interface	
Communication interface	RS232, USB
Optional interfaces	RS232 or RS485 or 4IN/4OUT or Ethernet or analog output 4-20 mA
Electrical parameters	
Power supply	100 – 240 V AC 50/60 Hz
Optional power supply	internal rechargeable battery
Operation time on batteries	max 7h
Environmental conditions	
Operating temperature	-10 ÷ +40 °C
Relative humidity	10% ÷ 85% RH no condensation

Extra payment for verification

Accessories

RS 232 cables (scale - printer)
Displays
RS 232 cables (scale - Ethernet)
RS 232, RS 485 cables
RS 232 – Ethernet Converter
USB adatper
Receipt Printer
USB cable (scale - printer)
Stands, wall mounting kits and mounting brackets
RS 232 – USB Converter
RS 232, RS 485 cables

Software

- RAD Key [WX-010-0005]
- R-Lab [WX-010-0080]
- R-Panel [WX-010-0187]
- Scale Editor 2.1 [WX-010-0173]

Device dimensions

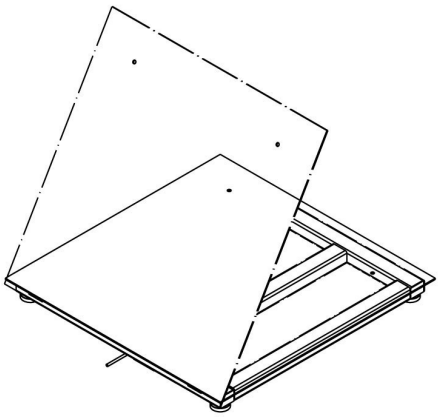

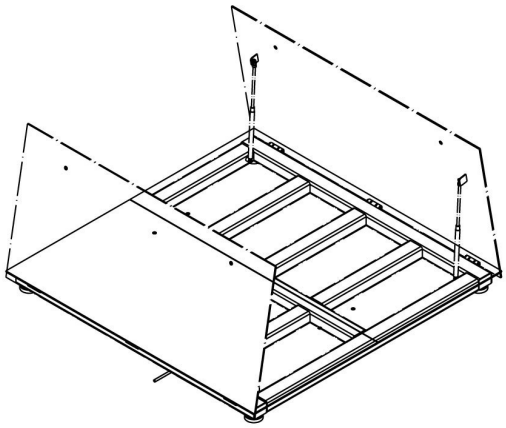

Single-leaf platform:
H315.4.H6/Z
H315.4.H7/Z
H315.4.H8/Z

Double-leaf platform:
H315.4.H8/9/Z
H315.4.H9/Z
H315.4.H10/Z

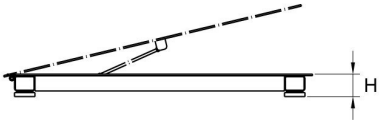

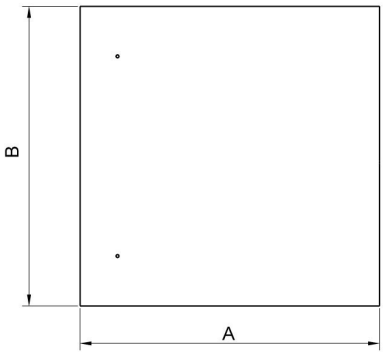

Scale type	A	B	H
H315.4.150-600.H6/Z	800	800	88±2
H315.4.150-1500.H7/Z	1000	1000	88±2
H315.4.300-1500.H8/Z	1200	1200	88 ±2
H315.4.3000.H8/Z	1200	1200	111 ±2
H315.4.300-1500.H8/9/Z	1200	1500	88 ±2
H315.4.3000.H8/9/Z	1200	1500	111 ±2
H315.4.300-1500.H9/Z	1500	1500	88 ±2
H315.4.3000-6000.H9/Z	1500	1500	111 ±2
H315.4.600-6000.H10/Z	1500	2000	111 ±2

dimensions in mm