Piattaforma PL/4/1500/H9/Z

WX-009-0064

More information on the website
radwag.com/it/info,w1,CBZ



The drawings, photos and graphics used are for illustrative purposes only.

Specifiche

Parametri metrologici	
Portata massima [Max]	1500 kg
Divisione [d]	500 g
Costruzione	
Punteggio IP	IP 66 / 69
Costruzione	Stainless steel AISI304
Materiale da pesata	Stainless steel AISI304
Parametri fisici	
Dimensione piatto	1500×1500 mm
Altezza della piattaforma	88 mm

Precisione di lettura - valore previsto, a seconda dei parametri del trasmettitore di misura utilizzato.

Accessori (Additional Fee)

Terminale di pesata PUE 5
Terminale di pesata PUE HX7
Terminale di pesata PUE 7.1
Terminale di pesata PUE HY10

Device dimensions L x P x A

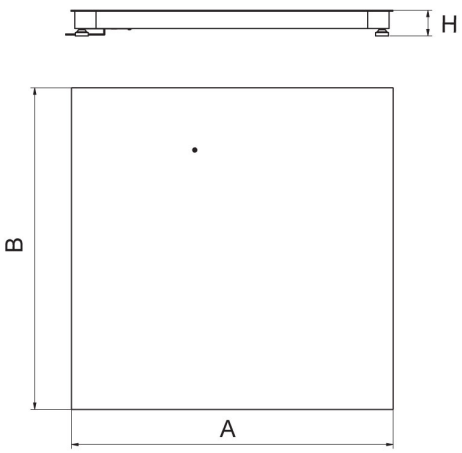

Platform	A	B	H
PLC/4/C6	800	800	120 ±10
PLC/4/C7	1000	1000	120 ±10
PLC/4/C8	1200	1200	120 ±10
PLC/4/C8/9	1200	1500	120 ±10
PLC/4/C9	1500	1500	120 ±10
PLC/4/C10	1500	2000	120 ±10
PLC/4/C11	2000	2000	120 ±10

dimensions in mm

PLC/4/C

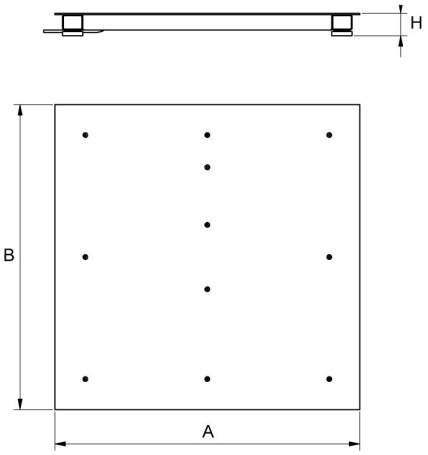

Platform	A	B	H
PL/4/H6	800	800	88 ±2
PL/4/H7	1000	1000	88 ±2
PL/4/H8	1200	1200	88 ±2
PL/4/H8/9	1200	1500	88 ±2
PL/4/H9	1500	1500	88 ±2
PL/4/H10	1500	2000	111 ±2

dimensions in mm

PL/4/H

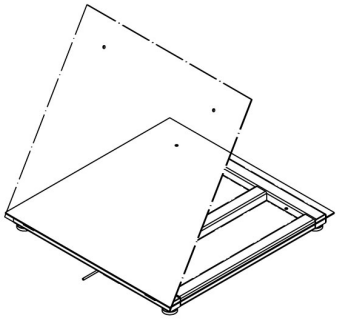

PL/4/H6/Z
PL/4/H7/Z
PL/4/H8/Z

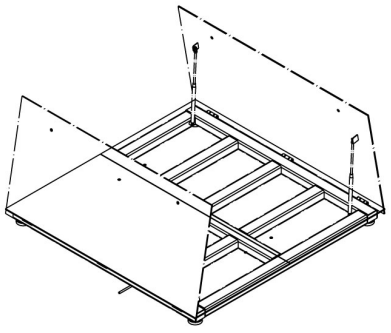

PL/4/H8/9/Z
PL/4/H9/Z
PL/4/H10/Z

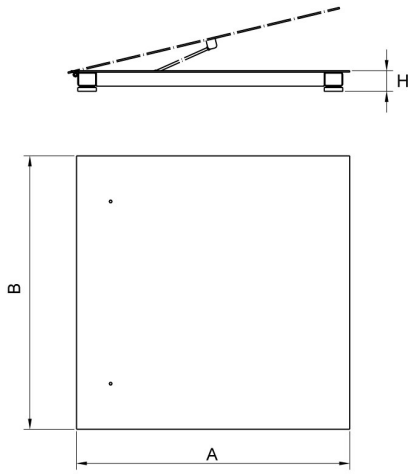

Platform	A	B	H
PL/4/H6/Z	800	800	88 ±2
PL/4/H7/Z	1000	1000	88 ±2
PL/4/H8/Z	1200	1200	88 ±2
PL/4/H8/9/Z	1200	1500	88 ±2
PL/4/H9/Z	1500	1500	88 ±2
PL/4/H10/Z	1500	2000	111 ±2

dimensions in mm

PL/4/H/Z