radwag.com

PL/4/1500/H9/Z Platform

WX-009-0064

More information on the website
radwag.com/en/info,w1,CBZ



The drawings, photos and graphics used are for illustrative purposes only.

Datasheet

Metrological parameters	
Maximum capacity [Max]	1500 kg
Readability [d]	500 g
Construction	
Protection class	IP 66 / 69
Construction	Stainless steel AISI304
Weighing pan material	Stainless steel AISI304
Physical parameters	
Weighing pan dimensions	1500×1500 mm
Weighing platform height	88 mm

p> **Readability accuracy** – expected value, dependent on the parameters of the measuring transmitter used.

Accessories (Additional Fee)

PUE 5 Weighing Terminal
PUE HX7 Weighing Terminal

PUE 7.1 Weighing Terminal
PUE HY10 Weighing Terminal

Device dimensions W x D x H

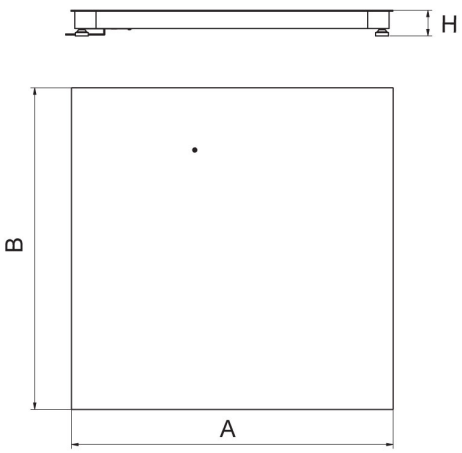

Platform	A	B	H
PLC/4/C6	800	800	120 ±10
PLC/4/C7	1000	1000	120 ±10
PLC/4/C8	1200	1200	120 ±10
PLC/4/C8/9	1200	1500	120 ±10
PLC/4/C9	1500	1500	120 ±10
PLC/4/C10	1500	2000	120 ±10
PLC/4/C11	2000	2000	120 ±10

dimensions in mm

PLC/4/C

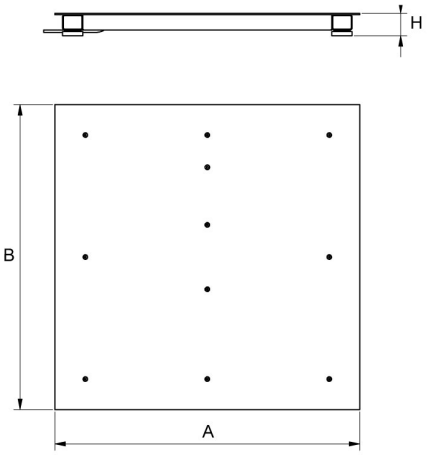

Platform	A	B	H
PL/4/H6	800	800	88 ±2
PL/4/H7	1000	1000	88 ±2
PL/4/H8	1200	1200	88 ±2
PL/4/H8/9	1200	1500	88 ±2
PL/4/H9	1500	1500	88 ±2
PL/4/H10	1500	2000	111 ±2

dimensions in mm

PL/4/H

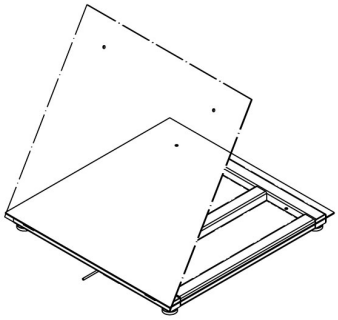

PL/4/H6/Z
PL/4/H7/Z
PL/4/H8/Z

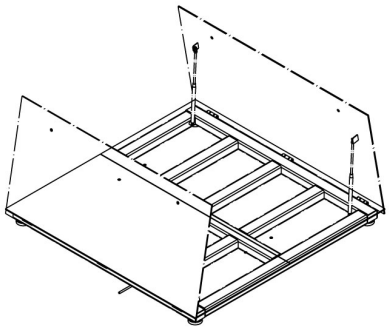

PL/4/H8/9/Z
PL/4/H9/Z
PL/4/H10/Z

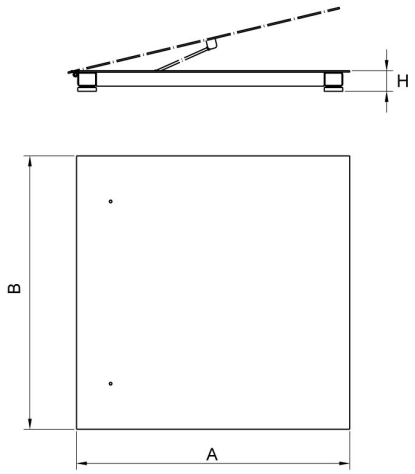

Platform	A	B	H
PL/4/H6/Z	800	800	88 ±2
PL/4/H7/Z	1000	1000	88 ±2
PL/4/H8/Z	1200	1200	88 ±2
PL/4/H8/9/Z	1200	1500	88 ±2
PL/4/H9/Z	1500	1500	88 ±2
PL/4/H10/Z	1500	2000	111 ±2

dimensions in mm

PL/4/H/Z