radwag.com

HY10.10.HRP.H High Resolution Scale

More information on the website
radwag.com/en/info,w1,0CC

The drawings, photos and graphics used are for illustrative purposes only.

Functions

- Dosing
- Labelling
- Plus/Minus Control
- Percent Weighing
- Totalizing
- Parts counting
- Peak hold
- Formulation
- Newton unit measurement
- Statistics
- Checkweighing
- GLP Procedures
- Animal weighing
- Differential weighing
- Replaceable unit
- Statistical Quality Control
- ALIBI Memory
- Transactions

Datasheet

Metrological parameters	
Maximum capacity [Max]	10 kg
Minimum load	5 g
Preload range	4 kg
Readability [d]	0.02 g

Metrological parameters	
Tare range	-10 kg
Repeatability	0.03 g
Linearity	±0.06 g
Stabilization time	2 s
Adjustment	internal (automatic)
Physical parameters	
Display	10" graphic colour touchscreen
Weighing pan dimensions	360×280 mm
Net weight	24.7 kg
Gross weight	28.7 kg
Construction	
Protection class	IP 66/67 construction, IP 68/69 indicator
Construction	Stainless steel AISI304
Weighing pan material	Stainless steel AISI304
Communication interface	
Communication interface	2×RS232, 2×USB-A, Ethernet, 4 IN / 4 OUT (digital)
Optional interfaces	module Wi-Fi 802.11 b/g/n, module Profibus (DP SLAVE), module RS485, module PROFINET (RJ45), analog output module (4-20mA, 0-20mA, 0-10V) , 12IN / 12OUT (IN – 5-24 VDC, OUT – max 30 VDC, 0.5 ADC)
Electrical parameters	
Power supply	100 – 240 V AC 50/60 Hz
Environmental conditions	
Operating temperature	+10 ÷ +40 °C
Relative humidity	40% ÷ 80%

Repeatability is expressed as the standard deviation of ten load placements.
Relative humidity under non-condensing conditions.
Stabilization time under optimal environmental conditions.

* Wi-Fi® is a registered trademark of Wi-Fi® Alliance.

Accessories

RS 232 cables (scale - printer)
Transponder card readers
RS 232 cables (scale - ZEBRA printer)
RS 232 cables (scale - Ethernet)
Displays
IN/OUT Cables
Stands, wall mounting kits and mounting brackets
RS 232, RS 485 cables
Keypad, external switches
Receipt Printer
USB cable (scale - printer)
Additional Weighing platforms Module

Barcode scanners
Label Printers

Additional modules
RS 232 – USB Converter

Software

- E2R Weighing [WX-010-0099]
- E2R Weighing Records [WX-010-0038]
- Audit Trail Reader [WX-010-0186]
- RADWAG Remote Desktop [WX-010-0107]
- Scale Editor 2.1 [WX-010-0173]
- E2R Formulations [WX-010-0043]
- RAD Key [WX-010-0005]
- Label Editor R02 [WX-010-0094]
- R-Lab [WX-010-0080]
- RADWAG Development Studio [WX-010-0104]

Device dimensions

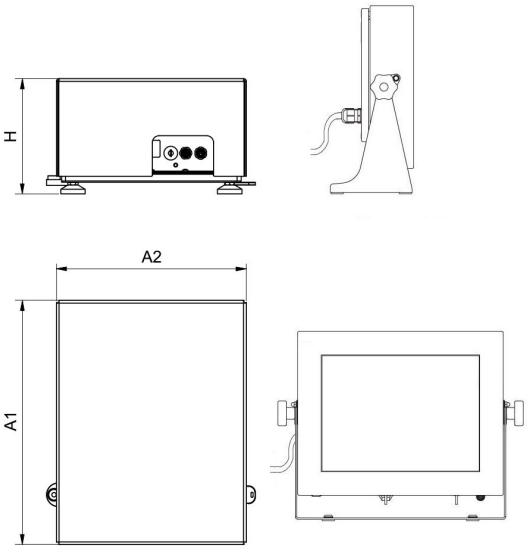

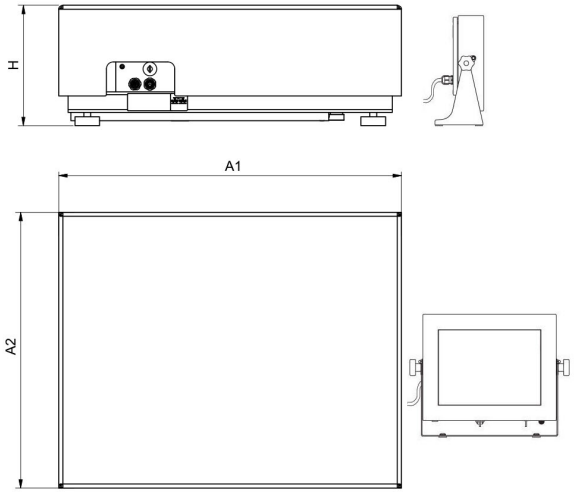

HY10.16 - 32.HRP.H

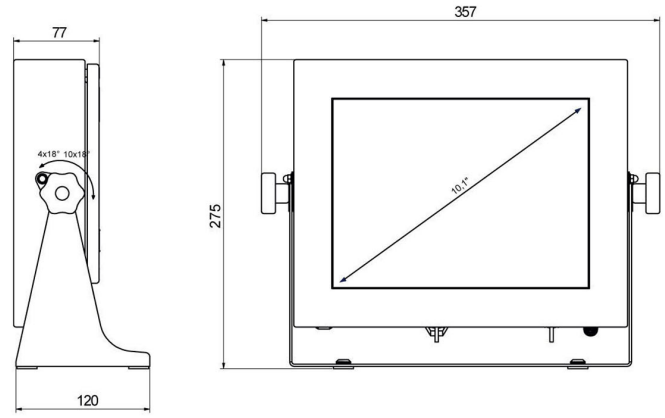

Scale type	A1	A2	H
HY10.(16-32).HRP.H	360	280	180±5
HY10.(62-150).HRP.H	500	400	180±5
HY10.150.2.HRP.H	500	500	180±5
HY10.(150.1-300).HRP.H	800	600	180±5
HY10.(300.1-1100).HRP.H	1000	800	180±5
HY10.(2000).HRP.H	1250	1000	180±5

Dimensions in mm

PUE HY10